Audi Q7-MIB2/B9/B8 WIRING DIAGRAM---LDS-Q7-MINI

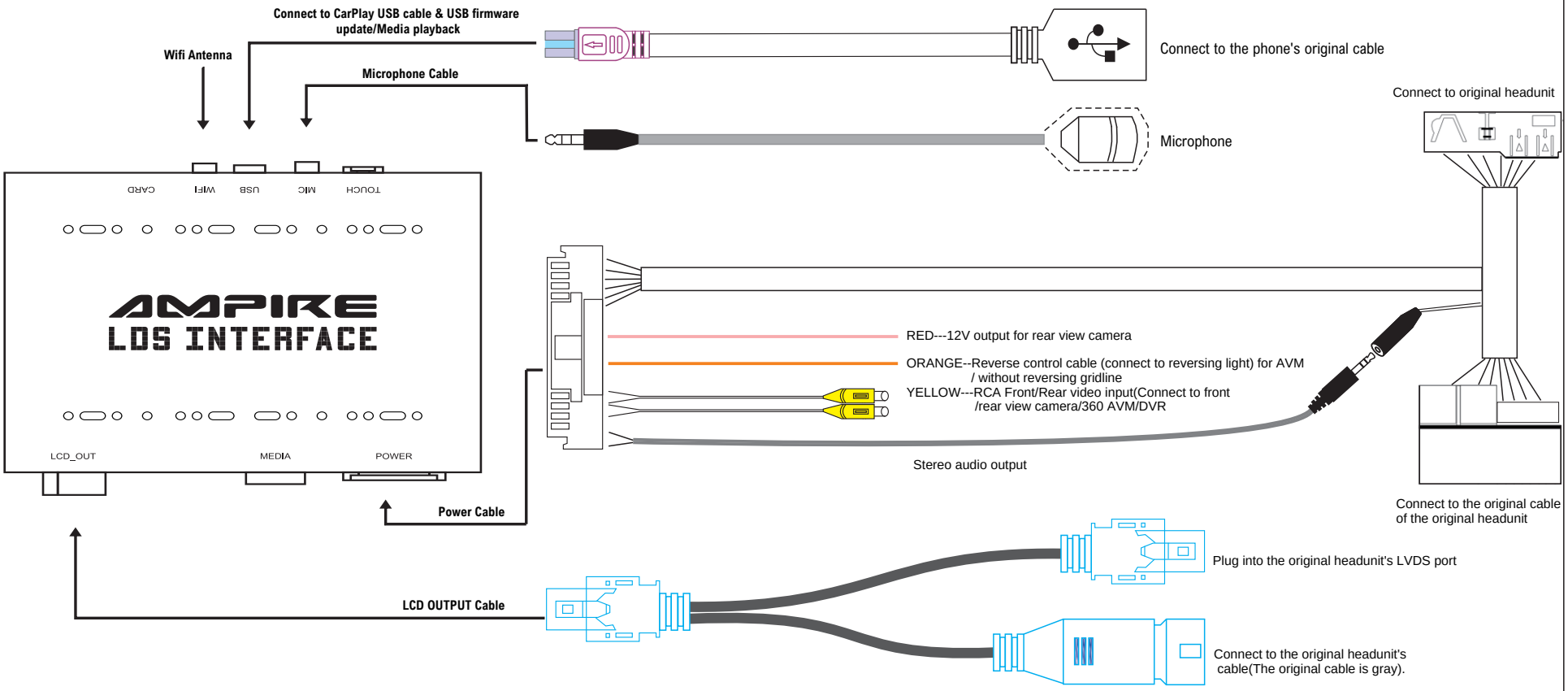

DIP SWITCH SETTING

(After changing the dip code,press "reset"or power-on again)

PIN1	PIN2	PIN3	PIN5	CAR MODEL
ON	OFF	OFF	OFF	2017 A4/Q7 8" ----Gateway CAN1(CAN+Orange green/CAN-orange brown) connect to original ISO socket (Pin6-Purple CAN+/Pin12---Orange/brown CAN-)
ON	OFF	OFF	ON	2017 A4/Q7 7" ----Gateway CAN1 connect to original ISO socket gray(Pin6/ Pin12);Gateway CAN2 to ISO Pin1/Pin7; Q7 MMI blue&white to ISO Pin3
OFF	OFF	ON	ON	high-end A3(7") ----Gateway CAN1 connect to ISO socket's (Gray socket)Pin6&12,Gateway CAN2 connect to Pin1&7
OFF	ON	ON	ON	Low-end A3(5.8") -----Gateway CAN1 connect to ISO socket's (Gray socket)Pin6&12,Gateway CAN2 connect to Pin1&7

PIN4	OFF/ON	NG/NG
PIN6	OFF/ON	NG/NG
PIN7	OFF/ON	NG/Touch point coordinate correction,and turn to "OFF"
PIN8	OFF/ON	NG/NG

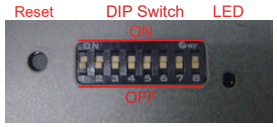

REMARK:Please keep in the AUX interface when switch the CarPlay interface
(If there is no AUX status,pls activate it by computer)

1) For A3/A4L/Q7 control panel,long press and hold "BACK" button to switch MENU, long press "BACK" button again,exit the switch MENU.
2)Short press "MENU" button to open "Siri".
3)Knob to control up/down/right/left/ok.